GUIDED COMPACT CYLINDERS
Ø 16÷100

GUIDED COMPACT CYLINDERS

The guided compact cylinder series CMPG is a robust and practical solution with a built-in guide unit. The rod guiding bushes are mounted directly in the anodized aluminium alloy lining.
Two guiding solutions are available: sintered bronze bushes coupled with ground carbon chromed steel rods, or ball recirculation bushes coupled with tempered, chromed and ground steel rods.
There are grooves on one side of the body to house the retractable sensors.
In the non-cushioned version, the stop is silenced by NBR front gaskets, and the cushioned version has adjustable pins to graduate braking.
Threaded holes and calibrated holes are provided for fixing the dowel pins.

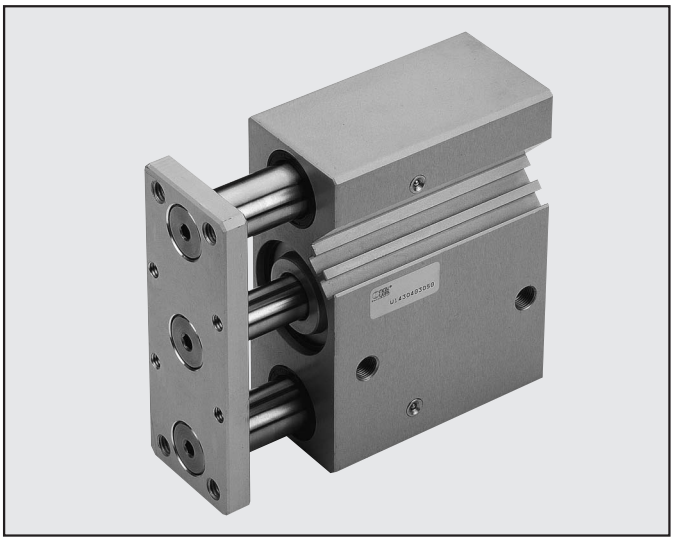

TECHNICAL DATA		CUSHIONED	NO-CUSHIONED
Operating pressure	bar	1÷10	
	MPa	0.1÷1	
	psi	14.5÷145	
Temperature range	°C	0÷80°C	
	°F	32÷176°F	
With dry air	°C	–20°	
	°F	–4°	
Strokes		Ø16: 20-30-40-50	Ø16: 10-20-30-40-50
		Ø20; Ø25: 20-30-40-50-75-100-150	Ø20; Ø25: 20-30-40-50-75-100-150
		Ø32÷63: 25-50-75-100,175	Ø32÷Ø100: 25-50-75-100,150, 200
			Other strokes on request but with the same cylinder dimensions as the standard stroke immediately above.
Version		With bronze bushings	
		With ball bearings	
Bores	mm	Ø 16; 20; 25; 32; 40; 50; 63; 80; 100.	
Weights		See GENERAL TECHNICAL DATA PAGE 1.1/07	

COMPONENTS

① JACKET: anodized aluminium alloy
② PISTON ROD: grinded chrome steel
③ GUIDE ROD: grinded chrome steel
④ GUIDE ROD: hardened and tempered chrome steel
⑤ REAR BASE: anodized aluminium alloy
⑥ FRONT BASE: anodized aluminium alloy
⑦ GUIDE BUSHING: self-lubricating bronze
⑧ BUFFER GASKET: NBR
⑨ PISTON: aluminium alloy
⑩ MAGNET: plastoferrite
⑪ PISTON GASKET: (PARKER PRADIFA) NBR
⑫ GUIDE RING: PTFE
⑬ SLIDE BUSHING: sintered bronze
⑭ BALL BEARINGS
⑮ DUST SCRAPER RING: NBR or FKM/FPM
⑯ GREASE NIPPLES: zinc-plated or stainless steel

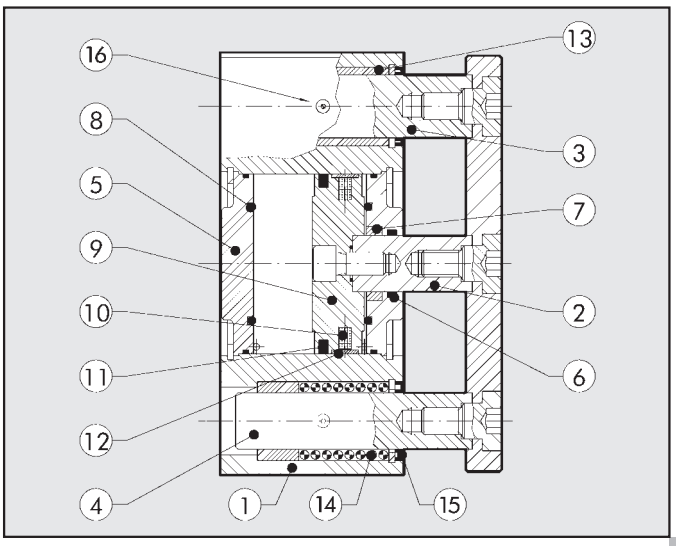

MAXIMUM SIDE LOAD

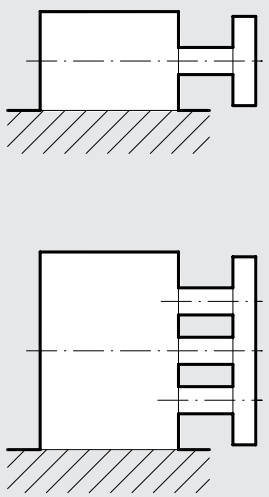

Ø mm	Guide unit	Stroke (mm) 10	20	25	30	40	50	75	100	150	200
16	Bushes	35	29	–	26	23	20	–	–	–	–
	Balls	29	31	–	45	38	34	–	–	–	–
20	Bushes	–	52	–	48	79	35	58	49	–	–
	Balls	–	56	–	61	54	70	54	50	–	–
25	Bushes	–	71	–	62	78	48	78	66	–	–
	Balls	–	72	–	–	–	73	60	52	–	–
32	Bushes	–	–	197	–	–	168	138	109	78	65
	Balls	–	–	89	–	–	60	276	217	138	110
40	Bushes	–	–	197	–	–	168	138	109	78	65
	Balls	–	–	89	–	–	60	276	217	138	110
50	Bushes	–	–	295	–	–	256	216	177	125	103
	Balls	–	–	138	–	–	89	393	314	184	148
63	Bushes	–	–	295	–	–	256	216	177	125	103
	Balls	–	–	138	–	–	89	393	314	184	148
80	Bushes	–	–	354	–	–	305	256	207	153	128
	Balls	–	–	236	–	–	158	864	687	413	335
100	Bushes	–	–	540	–	–	471	413	344	254	213
	Balls	–	–	471	–	–	314	1374	1074	629	511

NB: Forces are expressed in N

MAXIMUM TORQUE ON PLATE

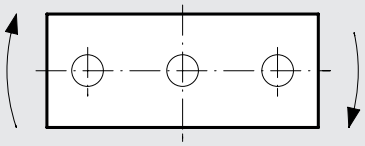

Ø mm	Guide unit	Stroke (mm) 10	20	25	30	40	50	75	100	150	200
16	Bushes	0.51	0.45	–	0.36	0.32	0.28	–	–	–	–
	Balls	0.74	0.6	–	0.5	0.72	0.65	–	–	–	–
20	Bushes	–	0.92	–	0.79	0.72	0.64	1.05	0.9	–	–
	Balls	–	1.28	–	1.08	1.78	1.59	1.24	1	–	–
25	Bushes	–	1.55	–	1.32	1.18	1.04	1.7	1.44	–	–
	Balls	–	1.98	–	1.7	2.16	2.2	1.66	1.4	–	–
32	Bushes	–	–	3.94	–	–	2.95	2.46	1.97	1.55	1.24
	Balls	–	–	1.97	–	–	1	2.96	2.44	2.40	2.18
40	Bushes	–	–	4.4	–	–	3.45	2.96	2.46	1.70	1.40
	Balls	–	–	2.46	–	–	1.45	6.38	5.4	3.00	2.40
50	Bushes	–	–	7.36	–	–	5.9	4.9	4.4	3.00	2.50
	Balls	–	–	3.45	–	–	2.44	10.8	8.35	4.50	3.60
63	Bushes	–	–	7.85	–	–	6.38	5.4	4.9	3.40	2.80
	Balls	–	–	3.94	–	–	2.46	11.77	9.3	5.00	4.00
80	Bushes	–	–	11.78	–	–	9.8	7.84	6.88	5.30	4.40
	Balls	–	–	9.34	–	–	5.88	31.38	24.5	10.40	11.70
100	Bushes	–	–	22.55	–	–	19.62	16.68	14.7	10.65	8.90
	Balls	–	–	21.56	–	–	13.73	63.72	49.1	26.60	21.60

NB: Forces are expressed in Nm

ASSEMBLY OPTIONS

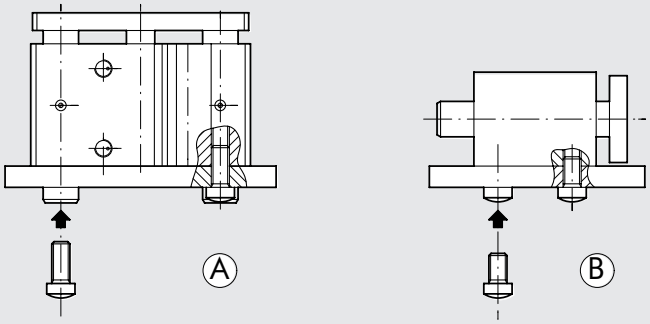

If the compact guided cylinder is mounted as shown in figure A, there need to be two through holes in the frame for the guide columns.

STOPPER FUNCTIONS

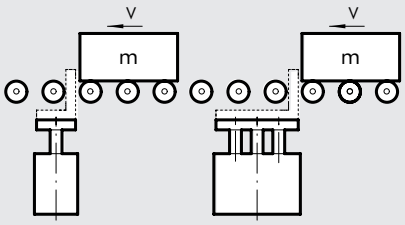

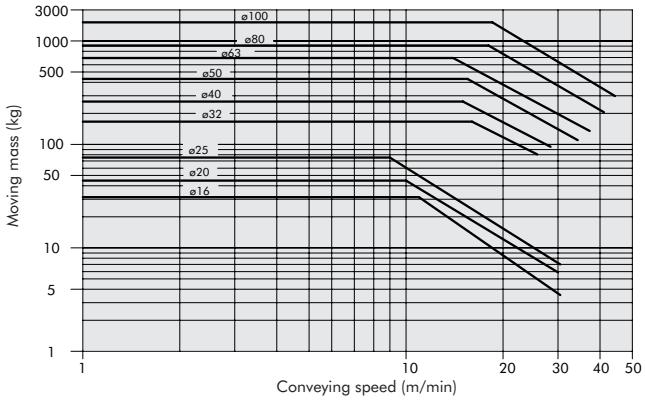

The graph refers to a 50mm-stroke cylinder.

LIFTING FUNCTIONS

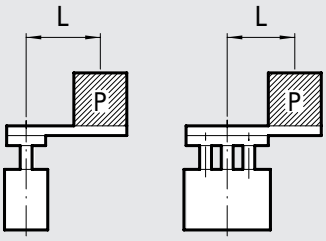

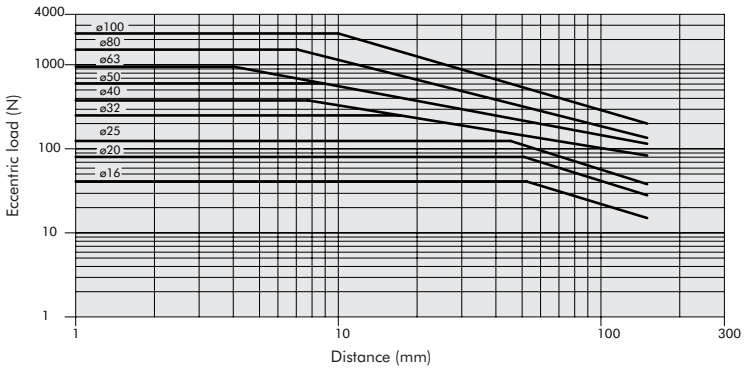

The graph refers from 25 to 50 mm-stroke cylinders with ball re-circulation guide unit.

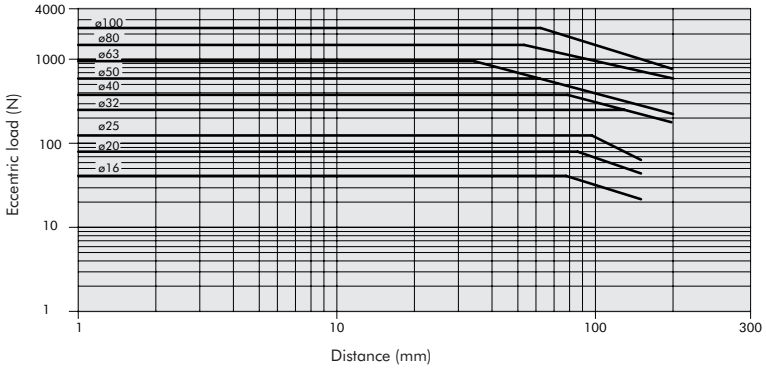

The graph refers from 75 to 100 mm-stroke cylinders with ball re-circulation guide unit.

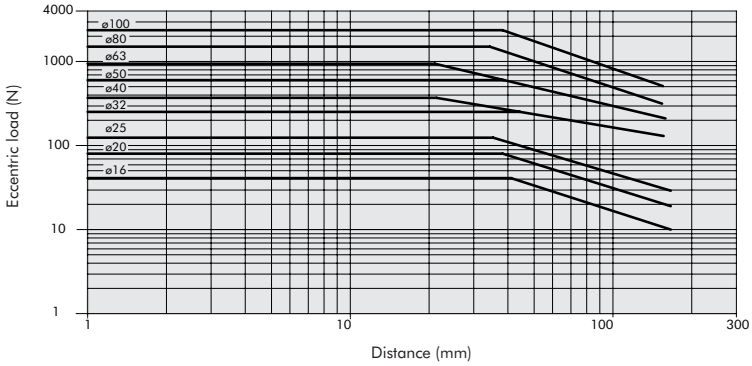

The graph refers to 50mm-stroke cylinders with bushing guide unit.

DIMENSIONS OF NO-CUSHIONED COMPACT GUIDED CYLINDERS

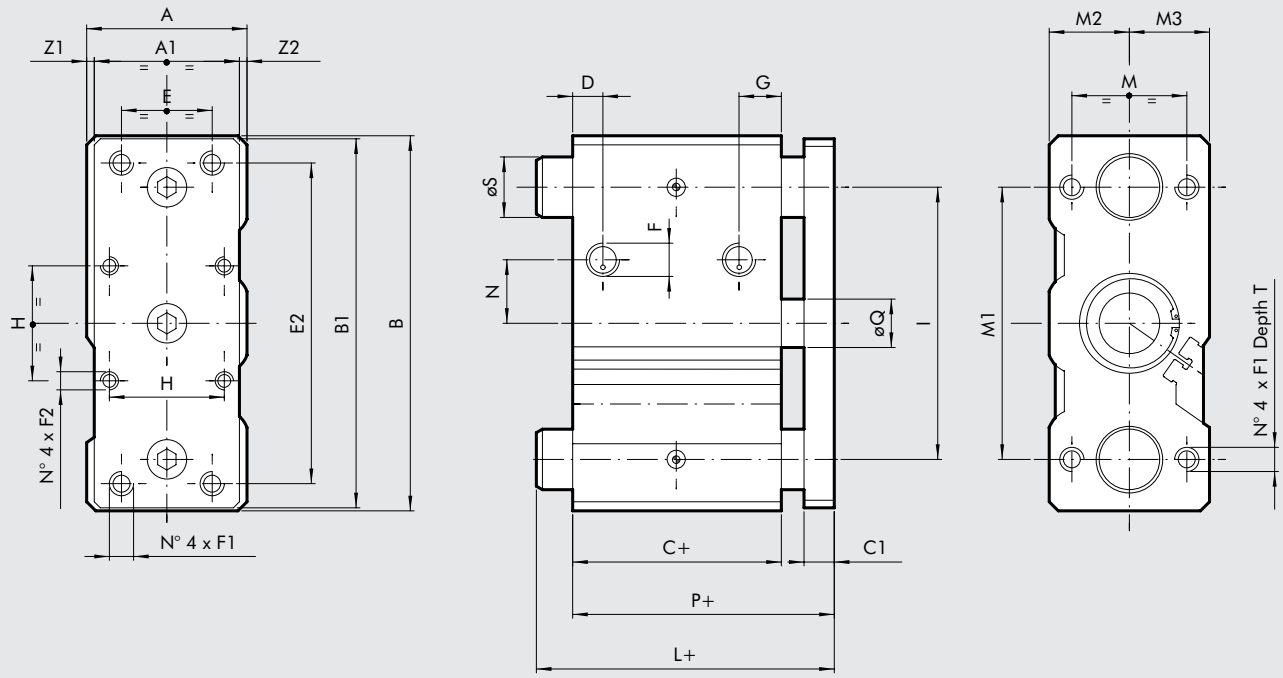

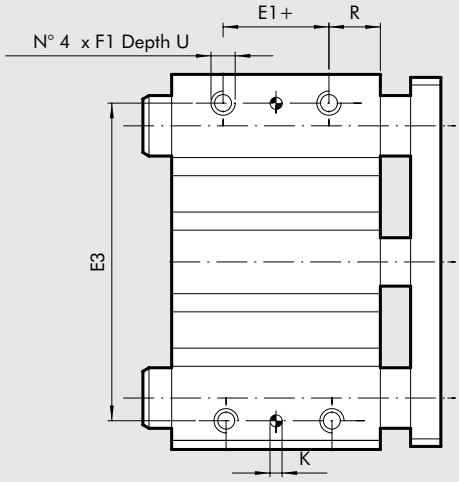

Ø S		
Ø	Bronze-Bushings	Ball Bearings
16	10	10
20	12	10
25	16	16
32	20	20
40	20	20
50	25	20
63	25	20
80	28	25
100	35	30

W143

+ = ADD THE STROKE

Ø	A	A1	B	B1	C	C1	D	E	E1	E2	E3	F	F1	F2	G	H	K^{H7}	I	L	M	M1	M2	M3	N	P	ØQ	R	T	U	Z1	Z2
16	33	25	64	62	33	10	8	16	7	52	54	M5	M5	–	11	–	4	40	*	22	42	15	18	6	45	8	13	13	8	5.5	2.5
20	36	29	74	72	37	10	8.5	18	10	60	64	1/8	M5	–	10.5	–	4	46	*	26	52	17	19	7	49	10	13	13	8	4.5	2.5
25	42	38	88	86	37.5	10	9	26	10	70	76	1/8	M6	–	11.5	–	4	56	*	32	62	21	21	8	49.5	12	14	15	9	2	2
32	51	48	114	112	37.5	10	9	30	5	96	100	1/8	M8	M6	12.5	32.5	6	80	73.5	38	80	25.5	25.5	15	49.5	16	16	20	11	1.5	1.5
40	51	48	124	122	44	10	10	30	10	106	110	1/8	M8	M6	14	38	6	90	73.5	38	90	25.5	25.5	21	56	16	17	20	11	1.5	1.5
50	59	56	140	138	44	12	11	40	10	120	124	1/4	M10	M8	14	46.5	6	100	83	44	100	29.5	29.5	27	58	20	17	25	12.5	1.5	1.5
63	72	69	150	148	49	12	13.5	50	10	130	132	1/4	M10	M8	16.5	56.5	6	110	83	44	110	36	36	33	63	20	19	25	15	1.5	1.5
80	92	88	188	185	56.5	16	15.5	60	15	160	166	3/8	M12	M10	19	72	8	140	93	56	140	46	46	37	74.5	25	21	30	18	2	2
100	112	108	224	221	66	16	19	80	15	190	200	3/8	M14	M10	23	89	8	170	105	62	170	56	56	40	84	30	25	35	21	2	2

* =	L stroke	
Ø	0÷50	75÷100
16	45	–
20	49	76
25	49.5	79.5

DIMENSIONS OF CUSHIONED COMPACT GUIDED CYLINDERS

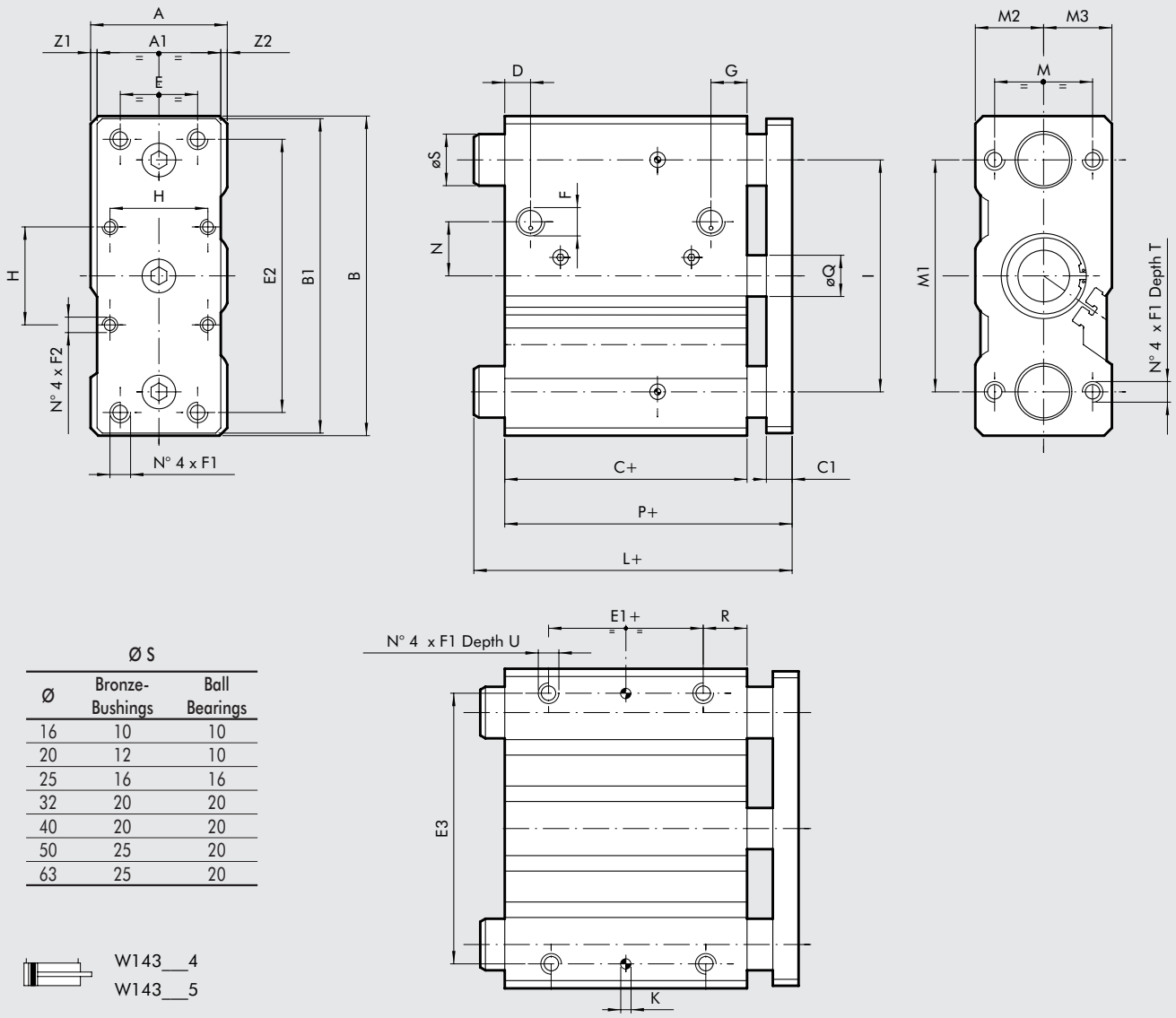

Ø S		
Ø	Bronze-Bushings	Ball Bearings
16	10	10
20	12	10
25	16	16
32	20	20
40	20	20
50	25	20
63	25	20

W143___4
W143___5

+ = ADD THE STROKE

Ø	A	A1	B	B1	C	C1	D	E	E1	E2	E3	F	F1	F2	G	H	KH7	I	L	M	M1	M2	M3	N	P	ØQ	R	T	U	Z1	Z2
16	33	25	64	62	58	10	8	16	32	52	54	M5	M5	–	11	–	4	40	*	22	42	15	18	6	73	8	13	13	8	5.5	2.5
20	36	29	74	72	62	10	8.5	18	35	60	64	1/8	M5	–	10.5	–	4	46	*	26	52	17	19	7	78	10	13	13	8	4.5	2.5
25	42	38	88	86	62.5	10	9	26	35	70	76	1/8	M6	–	11.5	–	4	56	*	32	62	21	21	8	78.5	12	14	15	9	2	2
32	51	48	114	112	62.5	10	9	30	30	96	100	1/8	M8	M6	12.5	32.5	6	80	98.5	38	80	25.5	25.5	15	74.5	16	16	20	11	1.5	1.5
40	51	48	124	122	69	10	10	30	35	106	110	1/8	M8	M6	14	38	6	90	98.5	38	90	25.5	25.5	21	81	16	17	20	11	1.5	1.5
50	59	56	140	138	69	12	11	40	35	120	124	1/4	M10	M8	14	46.5	6	100	108	44	100	29.5	29.5	27	83	20	17	25	12.5	1.5	1.5
63	72	69	150	148	74	12	13.5	50	35	130	132	1/4	M10	M8	16.5	56.5	6	110	108	44	110	36	36	33	88	20	19	25	15	1.5	1.5

* =	L stroke	
Ø	0÷50	75÷100
16	70	–
20	74	101.5
25	74.5	104.5

KEY TO CODES

W 1 4 3	0 3 0	2	0 2 5
TYPE	DIAMETER	VERSION	STROKE
	16 20 25 32 40 50 63 *80 *A1=100	2 bronze bushings 3 ball bearings 4 cushioned with brass bushings 5 cushioned with ball bearings	CUSHIONED VERSION Ø 16: 20, 30, 40, 50 Ø 20÷25: 20, 30, 40, 50, 75, 100, 150 Ø 32÷63: 25, 50, 75, 100, 150, 175 NOT CUSHIONED VERSION ♦ Ø 16: 10, 20, 30, 40, 50 Ø 20÷25: 20, 30, 40, 50, 75, 100, 150 Ø 32÷100: 25, 50, 75, 100, 150, 200 ♦ Other strokes on request but with the same cylinder dimensions as the standard stroke immediately above.

* Only for not cushioned version.

ACCESSORIES

RETRACTABLE SENSOR WITH INSERTION FROM ABOVE

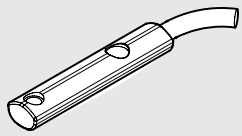

Code	Description
W0952025390	HALL N.O. SENSOR, VERTICAL INSERTION 2.5m
W0952029394	HALL N.O. SENSOR, VERTICAL INSERTION 300 mm M8
W0952022180	REED N.O. SENSOR, VERTICAL INSERTION 2.5m
W0952028184	REED N.O. SENSOR, VERTICAL INSERTION 300 mm M8

This type of sensor can be inserted in the slot of the sensor from above. This means the cylinder heads do not require a through opening.

WIRING DIAGRAM

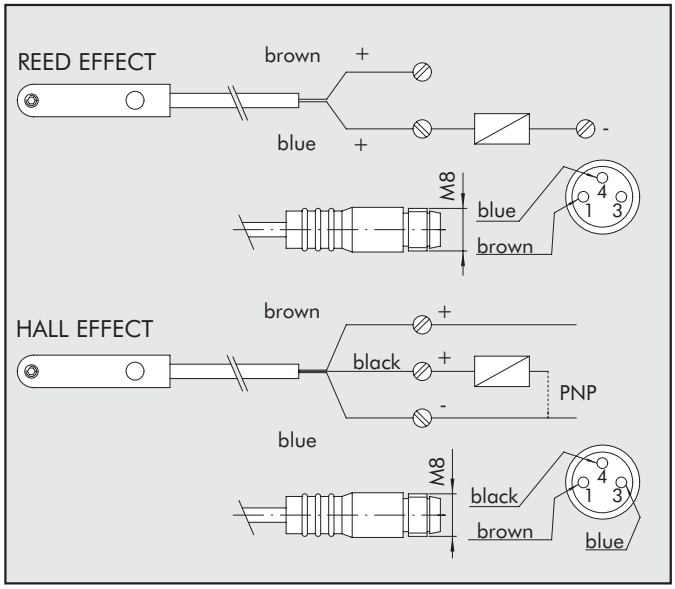

TECHNICAL DATA

		Reed	Effetto Hall
Type of contact		N.O.	N.O.
Switch		-	PNP
Supply voltage (Ub)	V	10 ÷ 30 AC/DC	10 ÷ 30 DC
Power	W	3 (peak valve=6)	3
Voltage variation		-	≤ 10% di Ub
Voltage drop	V	-	≤ 2
Input current	mA	-	≤ 10
Output current	mA	≤ 100	≤ 100
Switching frequency	Hz	≤ 400	≤ 5
Short-circuit protection		-	Yes
Over-voltage suppression		-	Yes
Polarity inversion protection		-	Yes
EMC		EN 60 947-5-2	EN 60 947-5-2
LED display		Yellow	Yellow
Magnetic sensitivity		2,8 mT ±25%	2,8 mT ±25%
Repeatability		≤ 0,1 mT	≤ 0,1 mT
Degree of protection (EN 60529)		IP 67	IP 67
Vibration and shock resistance		30 g, 11 ms, 10÷55 Hz, 1mm	30 g, 11 ms, 10÷55 Hz, 1mm
Temperature range	°C	-25 ÷+75	-25 ÷ +75
Sensor capsule material		PA66 + PA6I/6T	PA66 + PA6I/6T
2.5m connecting cable		PVC; 2 x 0,12 mm^2	PVC; 3 x 0,14 mm^2
Connecting cable with M8x1		Polyurethane; 2 x 0,14 mm^2	Polyurethane; 3 x 0,14 mm^2

BAR FOR GROOVING

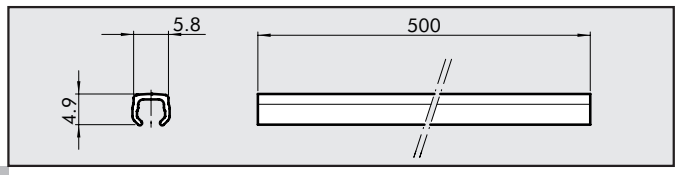

Code	Description
W0950000160	BAR FOR GROOVING L=500 mm

Note: the code corresponds to 1 piece